Pos.	Item name_Global	Item name_Local	Article No.	1028098/QTY.
1	Flat tank 6000l lying long side 2 extensions	Flachtank 6000l liegend lange Seite 2 Erweiterungen	103003	1
2	Overflow siphon with rhodent protection	Ueberlaufsiphon mit Tierschutz, gekuerzt	103201	1
3	Inlet flow turbulence reducer	Zulaufberuhiger	103211	1
4	Water connection box	Wasseranschlussbox	103206	1
5	Walkable cover, set standard	Begehbare Abdeckung, Set Standard	103100	1
6	Clean water pressure pump, set	Klarwasserdruckpumpe, Set	103151	1

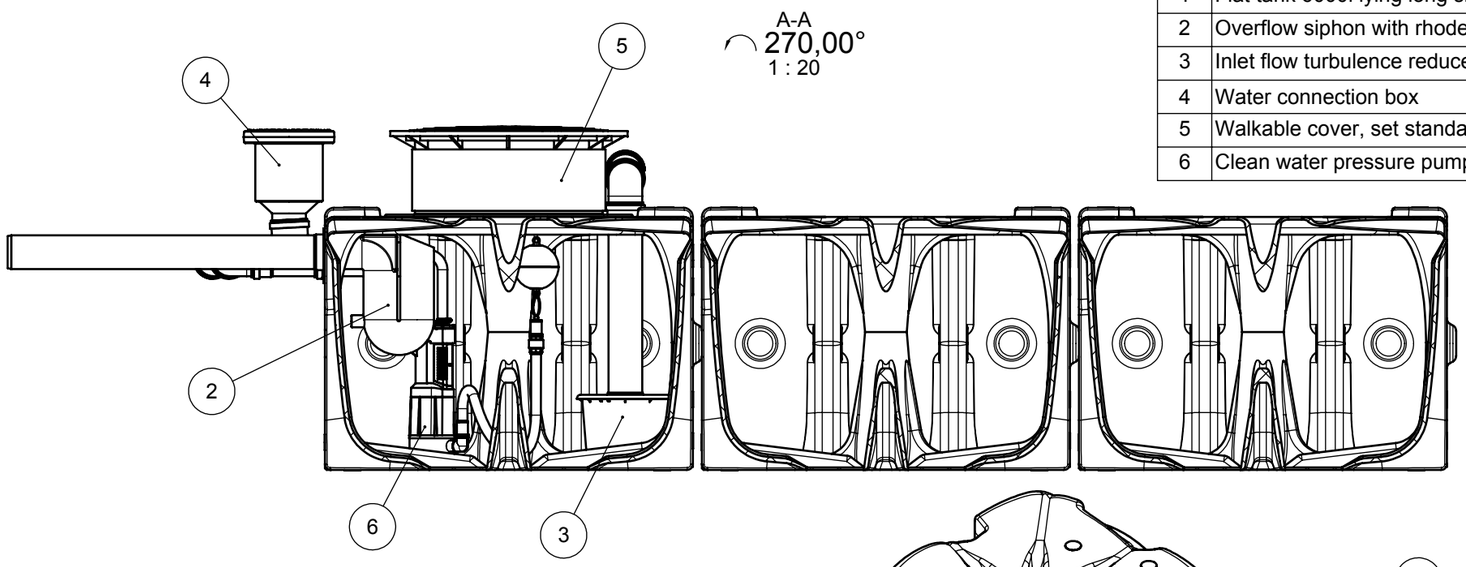

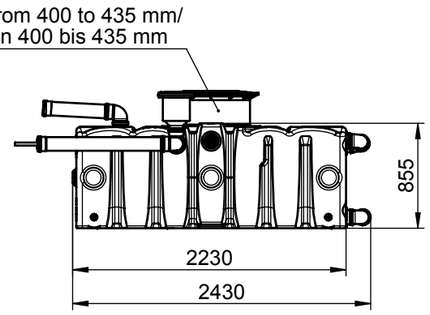

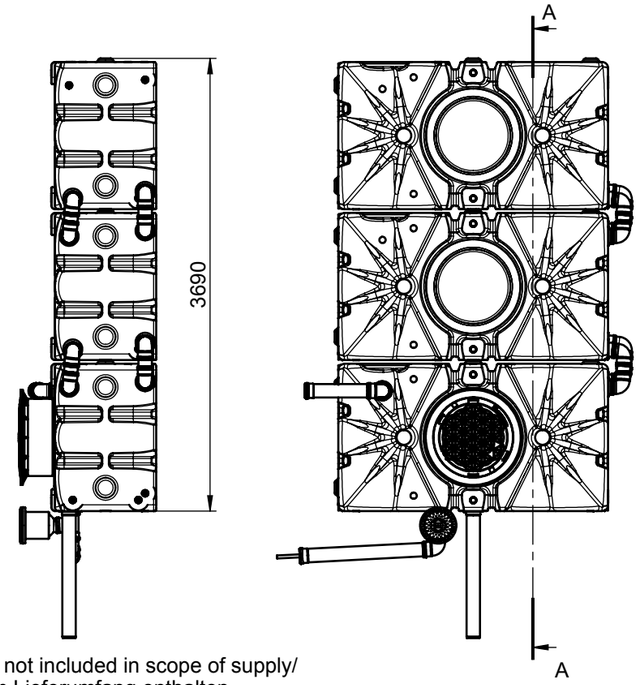

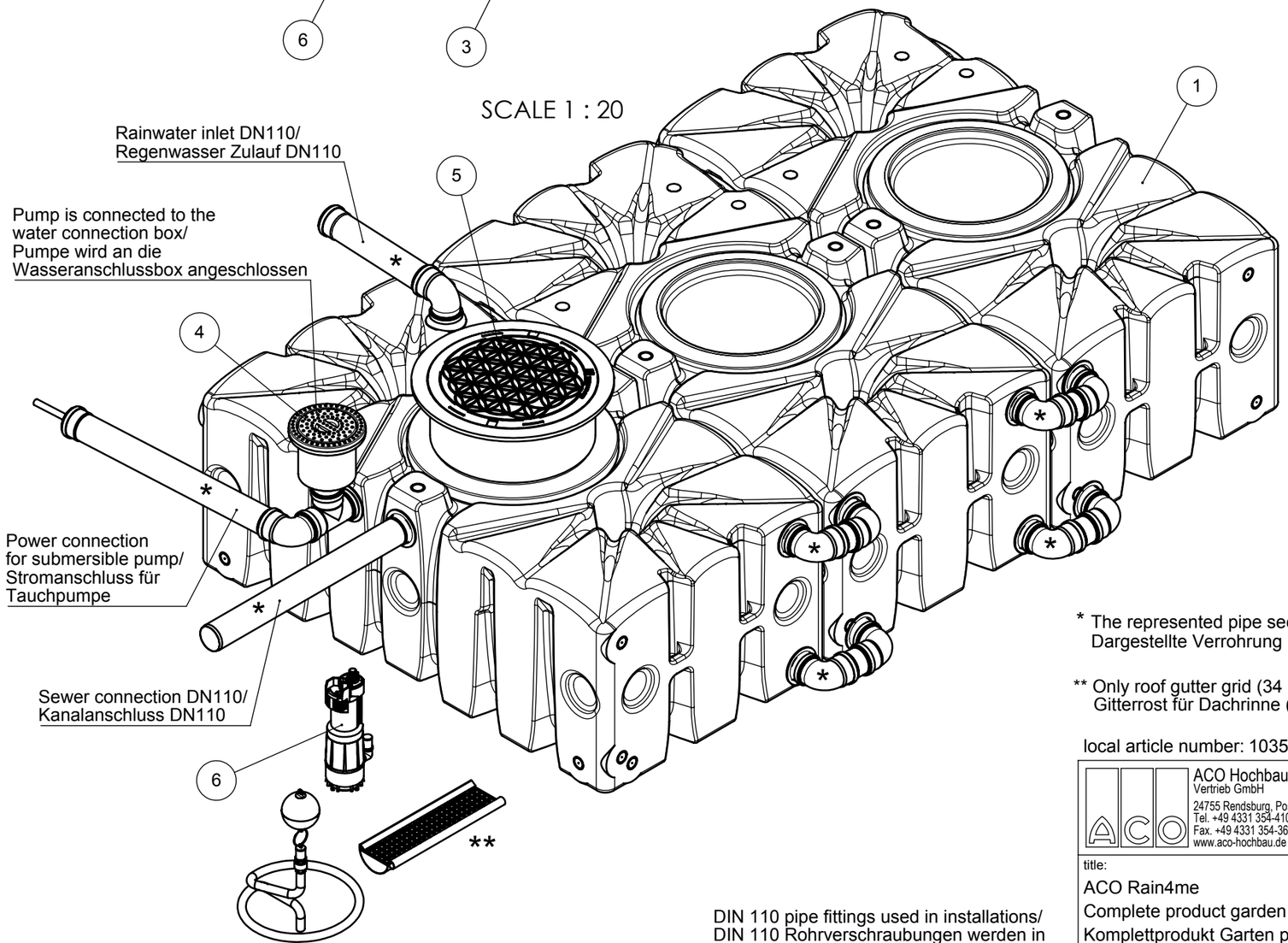

* The represented pipe sections are not included in scope of supply/
Dargestellte Verrohrung ist nicht im Lieferumfang enthalten

** Only roof gutter grid (34 pieces / 20 m approx.) is included in the scope of supply/
Gitterrost für Dachrinne (34 Stücke / 20 m ca.) im Lieferumfang enthalten

DIN 110 pipe fittings used in installations/
DIN 110 Rohrverschraubungen werden in
den Installationen verwendet.

local article number: 103517

ACO Hochbau
Vertrieb GmbH
24755 Rendsburg, Postfach 320
Tel. +49 4331 354-410
Fax. +49 4331 354-360
www.aco-hochbau.de

technical reference:	drawing-no.:	index:	documenttype:
Bartsch, Martin	**1028098-M**	**001**	marketing drw.
created by: mbartsch	reviewed by: mbartsch	projection:ISO-E	scale: 1:50

title:

ACO Rain4me

Complete product garden plus flat tank 6000l lying long side 2 extensions

Komplettprodukt Garten plus Flachtank 6000l liegend lange Seite 2 Erweiterungen

serial-released

The reproduction, distribution and utilization of this document as well as the communication of its contents to others without express authorization is prohibited. Offenders will be held liable for the payment of damages. All rights reserved in the event of the grant of a patent, utility model or design. Observe copyright by ISO 16016

release date: 2017-05-09 15:41

sheet: 1/1

Software 2014 - DIN A3 - Version 1.4

Pos.	Item name_Global	Item name_Local	Article No.	1028102/QTY.
1	Flat tank 6000l lying short side 2 extensions	Flachtank 6000l liegend kurze Seite 2 Erweiterungen	103023	1
2	Overflow siphon with rhodent protection	Ueberlaufsiphon mit Tierschutz, gekuerzt	103201	1
3	Inlet flow turbulence reducer	Zulaufberuhiger	103211	1
4	Water connection box	Wasseranschlussbox	103206	1
5	Walkable cover, set standard	Begehbare Abdeckung, Set Standard	103100	1
6	Clean water pressure pump, set	Klarwasserdruckpumpe, Set	103151	1

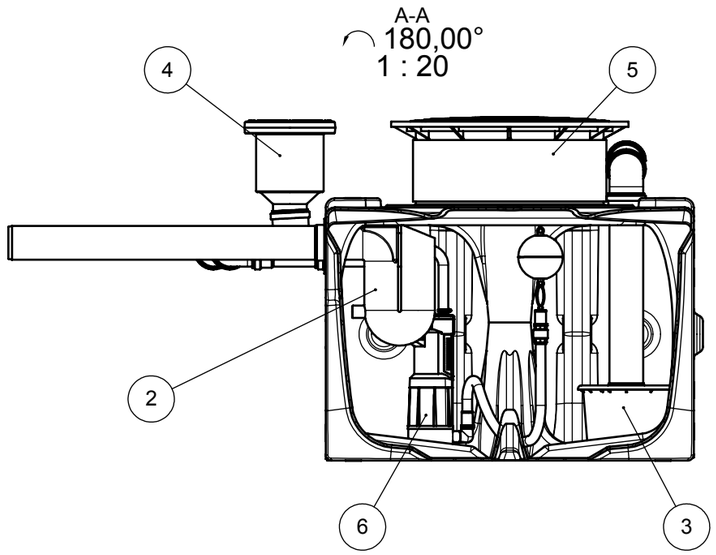

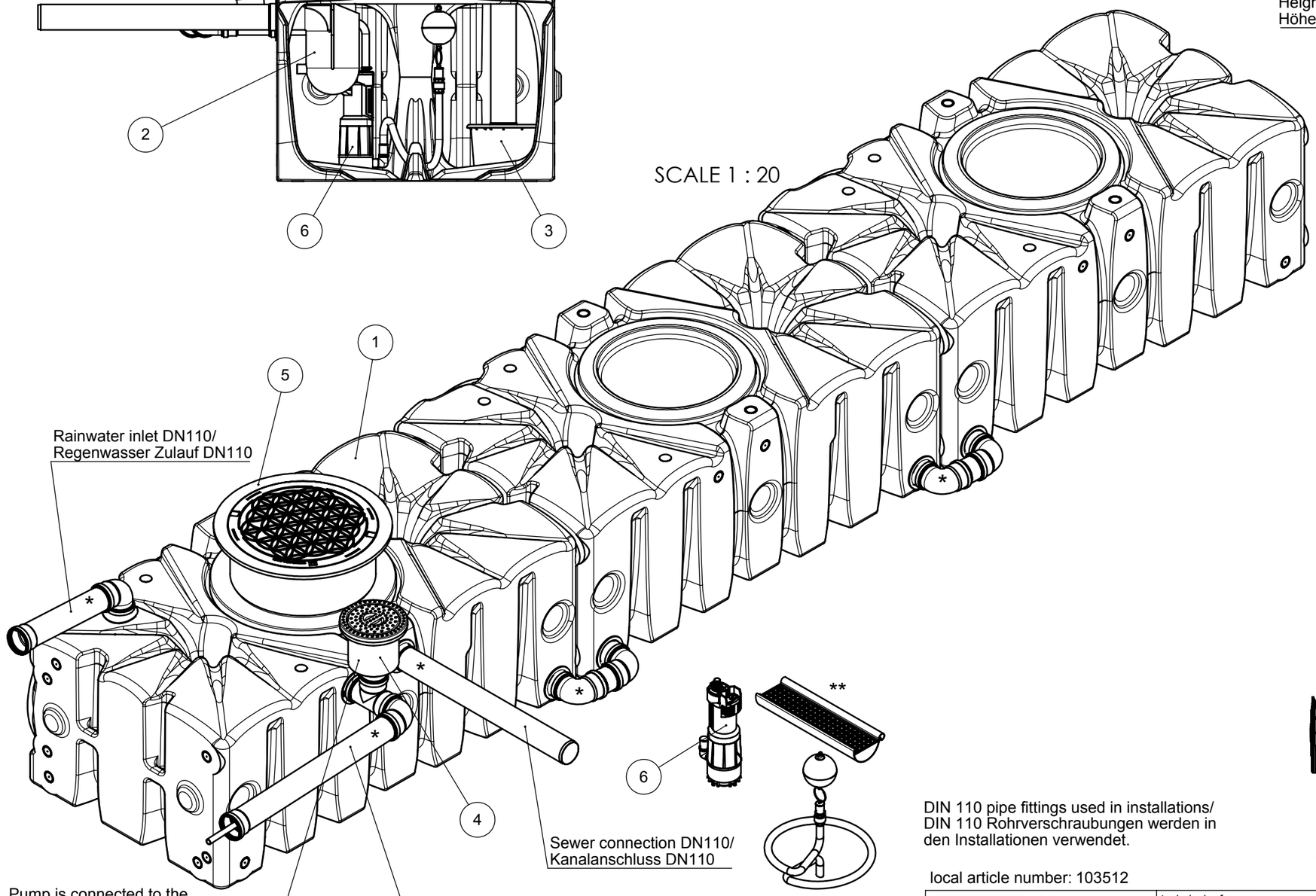

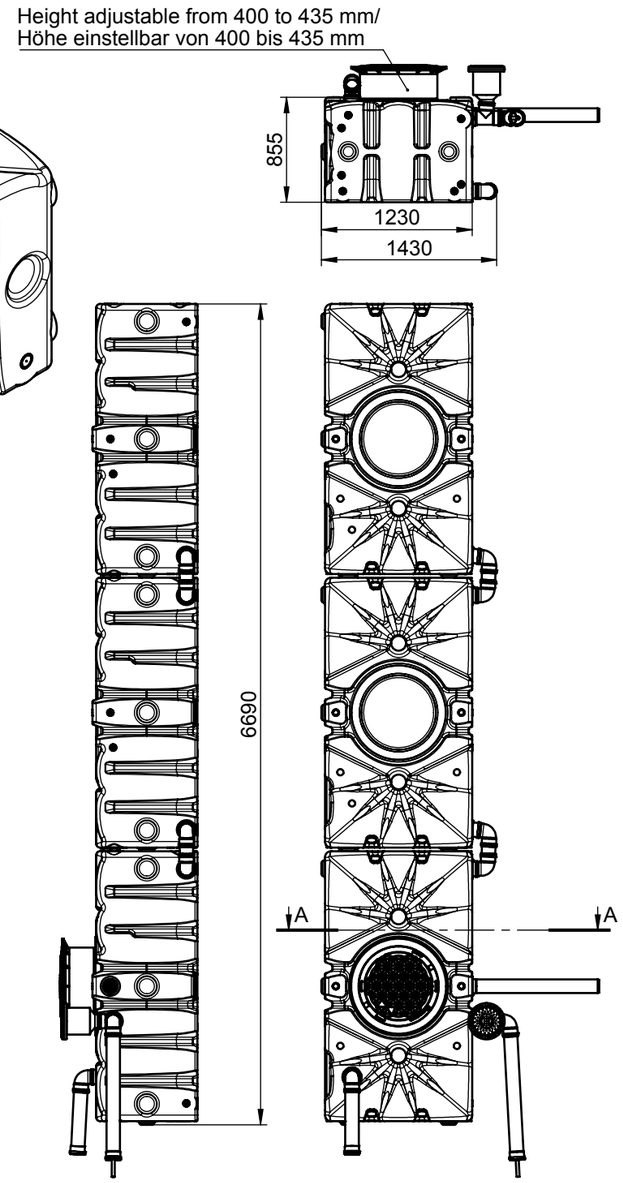

DIN 110 pipe fittings used in installations/
DIN 110 Rohrverschraubungen werden in
den Installationen verwendet.

local article number: 103512

* The represented pipe sections are not included in scope of supply/
Dargestellte Verrohrung ist nicht im Lieferumfang enthalten

** Only roof gutter grid (34 pieces / 20 m approx.) is included in the scope of supply/
Gitterrost für Dachrinne (34 Stücke / 20 m ca.) im Lieferumfang enthalten

ACO Hochbau
Vertrieb GmbH
24755 Rendsburg, Postfach 320
Tel. +49 4331 354-410
Fax. +49 4331 354-360
www.aco-hochbau.de

technical reference:	drawing-no.:	index:	documenttype:
Bartsch, Martin	**1028102-M**	**001**	marketing drw.
created by: mbartsch	reviewed by: mbartsch	projection:ISO-E	scale: 1:50

title:

ACO Rain4me

Complete product garden plus flat tank 6000l lying short side 2 extensions

Komplettprodukt Garten plus Flachtank 6000l liegend kurze Seite 2 Erweiterungen

serial-released

The reproduction, distribution and utilization of this document as well as the communication of its contents to others without express authorization is prohibited. Offenders will be held liable for the payment of damages. All rights reserved in the event of the grant of a patent, utility model or design. Observe copyright by ISO 16016

release date: 2017-05-09 15:51

sheet: 1/1

Solidworks 2014 - DIN A3 - Version 1.4

Pos.	Item name_Global	Item name_Local	Article No.	1028105/QTY.
1	Flat tank 6000l standing long side 2 extensions	Flachtank 6000l stehend lange Seite 2 Erweiterungen	103033	1
2	Overflow siphon with rhodent protection	Ueberlaufsiphon mit Tierschutz, gekuerzt	103201	1
3	Inlet flow turbulence reducer	Zulaufberuhiger	103211	1
4	Water connection box	Wasseranschlussbox	103206	1
5	Walkable cover, set standard	Begehbare Abdeckung, Set Standard	103100	1
6	Clean water pressure pump, set	Klarwasserdruckpumpe, Set	103151	1
7	Dome extension DN 600	Domverlaengerung DN 600	103103	1

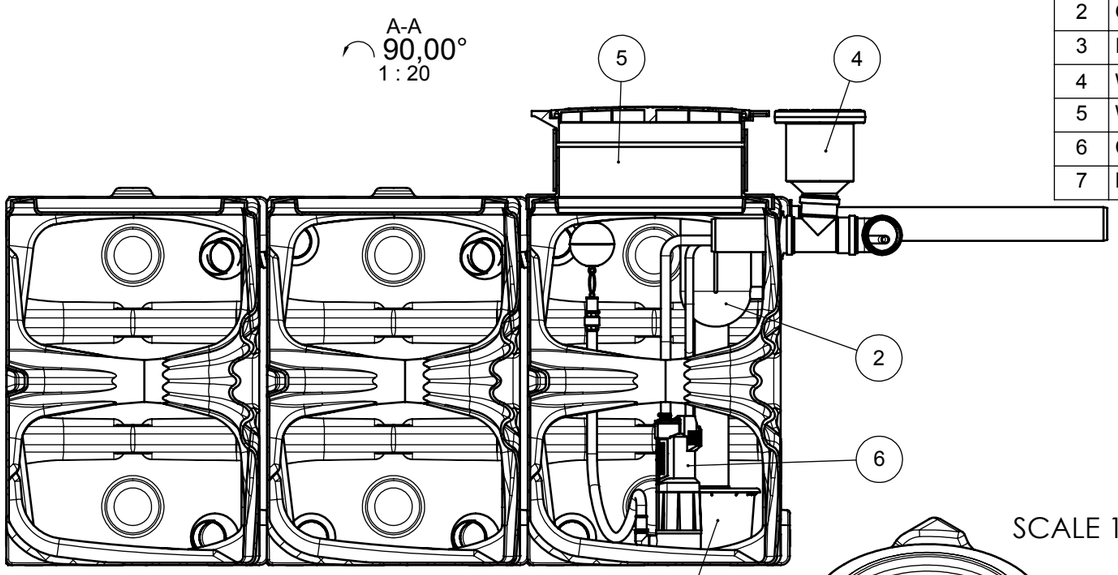

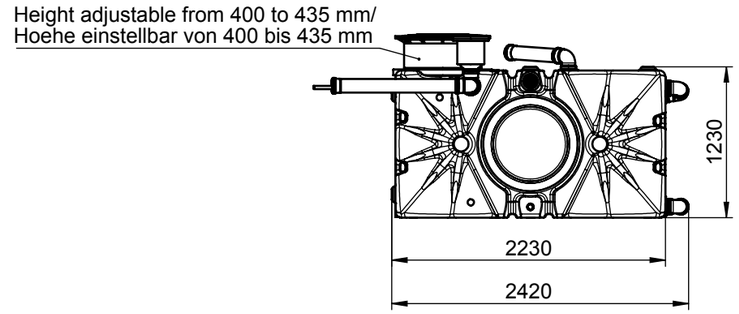

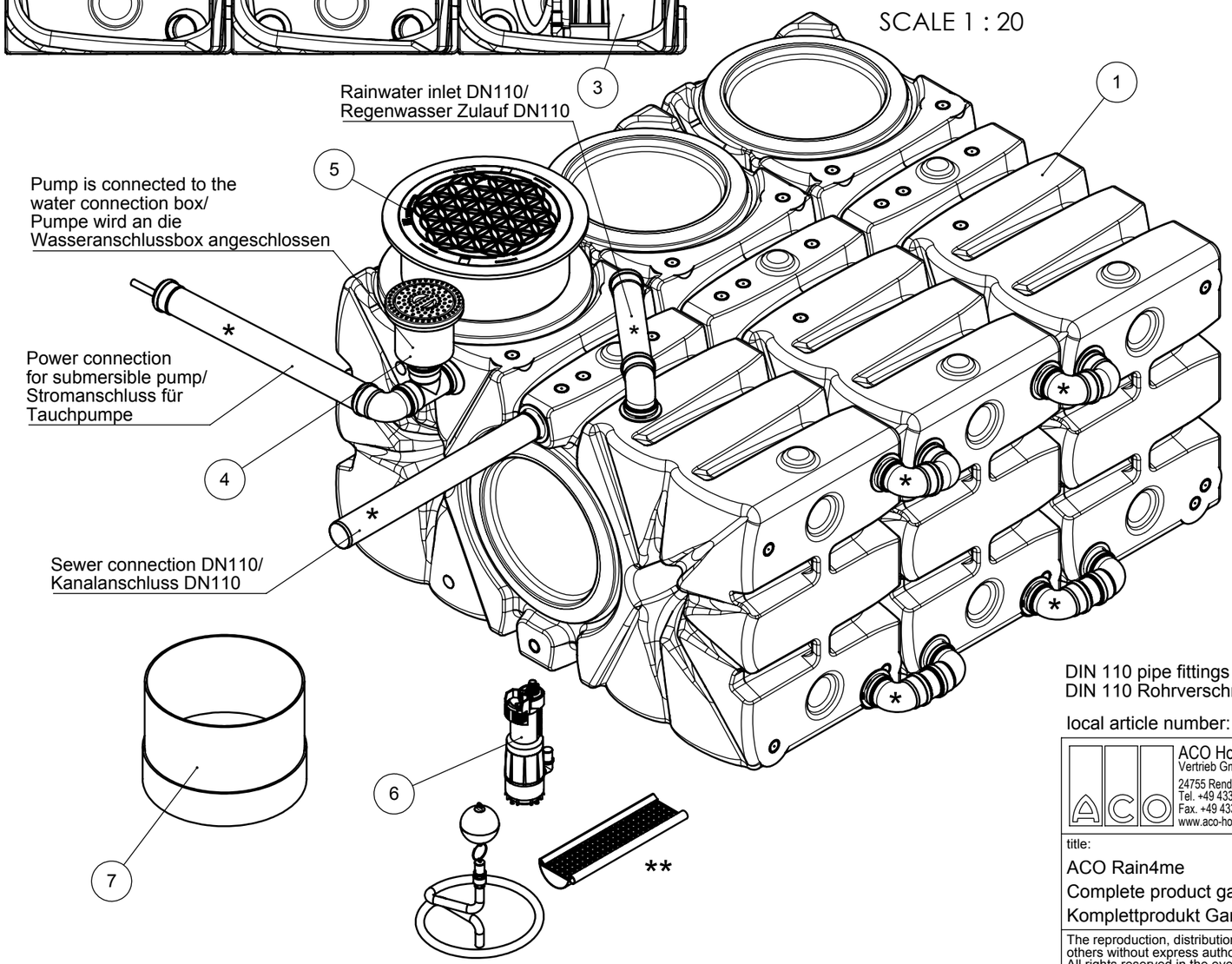

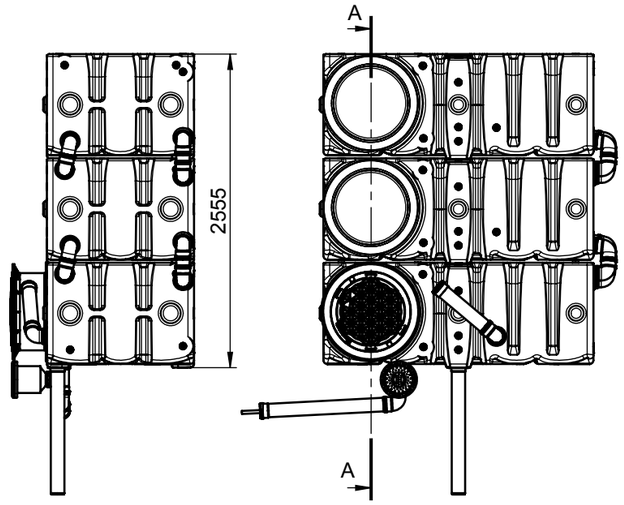

* The represented pipe sections are not included in scope of supply/
Dargestellte Verrohrung ist nicht im Lieferumfang enthalten

** Only roof gutter grid (34 pieces / 20 m approx.) is included in the scope of supply/
Gitterrost für Dachrinne (34 Stücke / 20 m ca.) im Lieferumfang enthalten

DIN 110 pipe fittings used in installations/
DIN 110 Rohrverschraubungen werden in den Installationen verwendet.

local article number: 103617

ACO Hochbau
Vertrieb GmbH
24755 Rendsburg, Postfach 320
Tel. +49 4331 354-410
Fax. +49 4331 354-360
www.aco-hochbau.de

technical reference:	drawing-no.:	index:	documenttype:
Bartsch, Martin	**1028105-M**	**001**	marketing drw.
created by: mbartsch	reviewed by: mbartsch	projection:ISO-E	scale: 1:50

title:

ACO Rain4me

Complete product garden plus flat tank 6000l standing long side 2 extensions

Komplettprodukt Garten plus Flachtank 6000l stehend lange Seite 2 Erweiterungen

serial-released

The reproduction, distribution and utilization of this document as well as the communication of its contents to others without express authorization is prohibited. Offenders will be held liable for the payment of damages. All rights reserved in the event of the grant of a patent, utility model or design. Observe copyright by ISO 16016

release date:	sheet:
2017-05-09 16:32	1/1

Solidworks 2014 - DIN A3 - Version 1.4

Pos.	Item name_Global	Item name_Local	Article No.	1028135/QTY.
1	Flat tank 6000l standing short side 2 extensions	Flachtank 6000l stehend kurze Seite 2 Erweiterungen	103043	1
2	Overflow siphon with rhodent protection	Ueberlaufsiphon mit Tierschutz, gekuerzt	103201	1
3	Inlet flow turbulence reducer	Zulaufberuhiger	103211	1
4	Water connection box	Wasseranschlussbox	103206	1
5	Walkable cover, set standard	Begehbare Abdeckung, Set Standard	103100	1
6	Clean water pressure pump, set	Klarwasserdruckpumpe, Set	103151	1
7	Dome extension DN 600	Domverlaengerung DN 600	103103	1

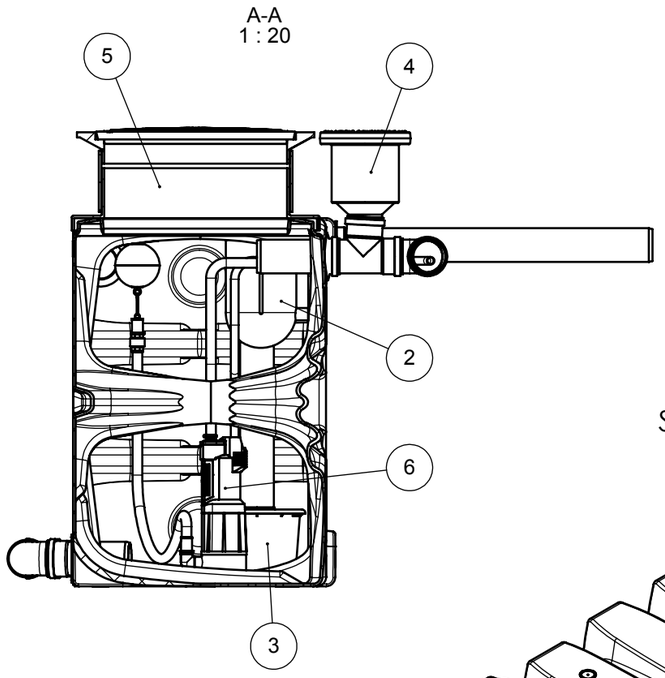

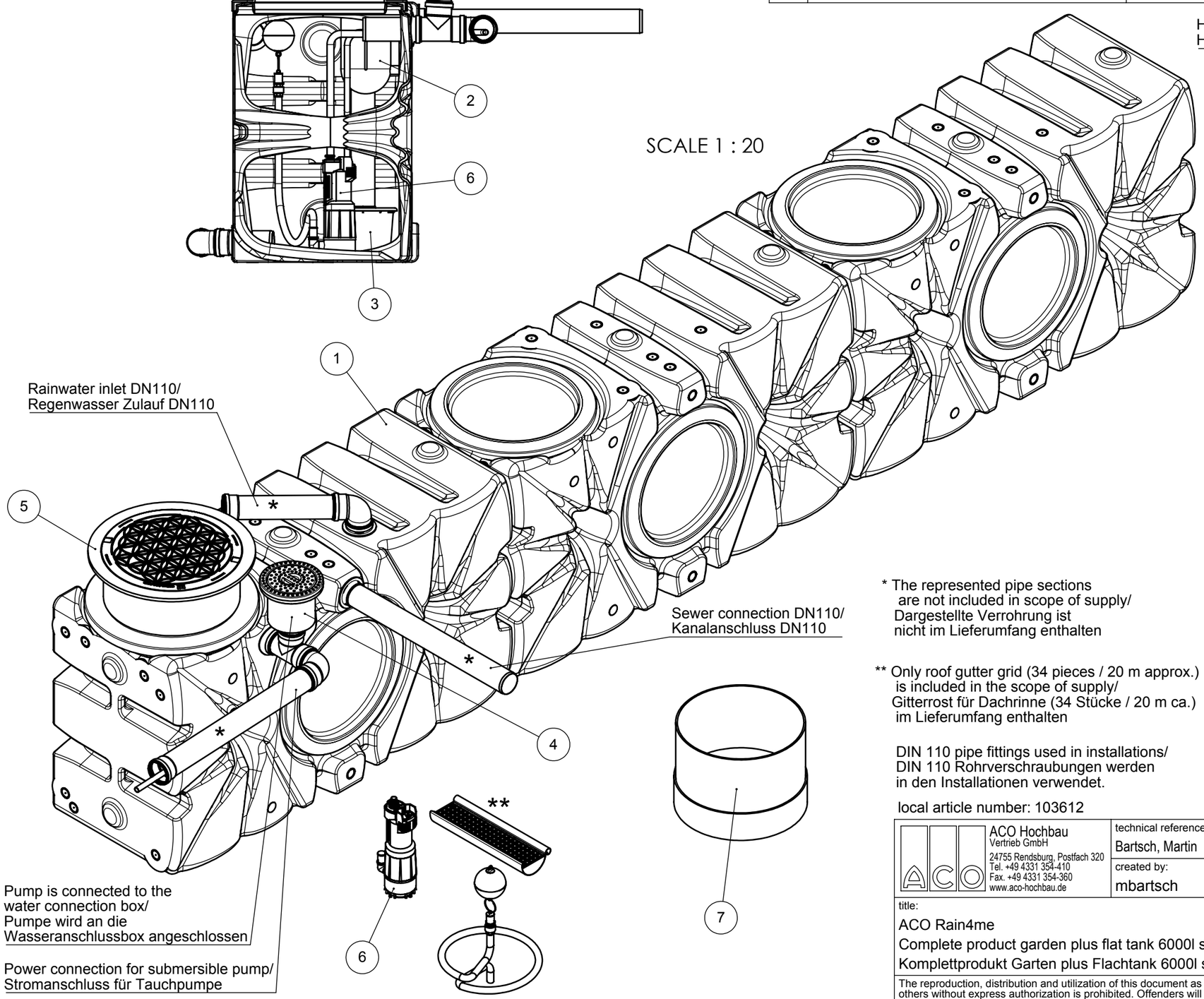

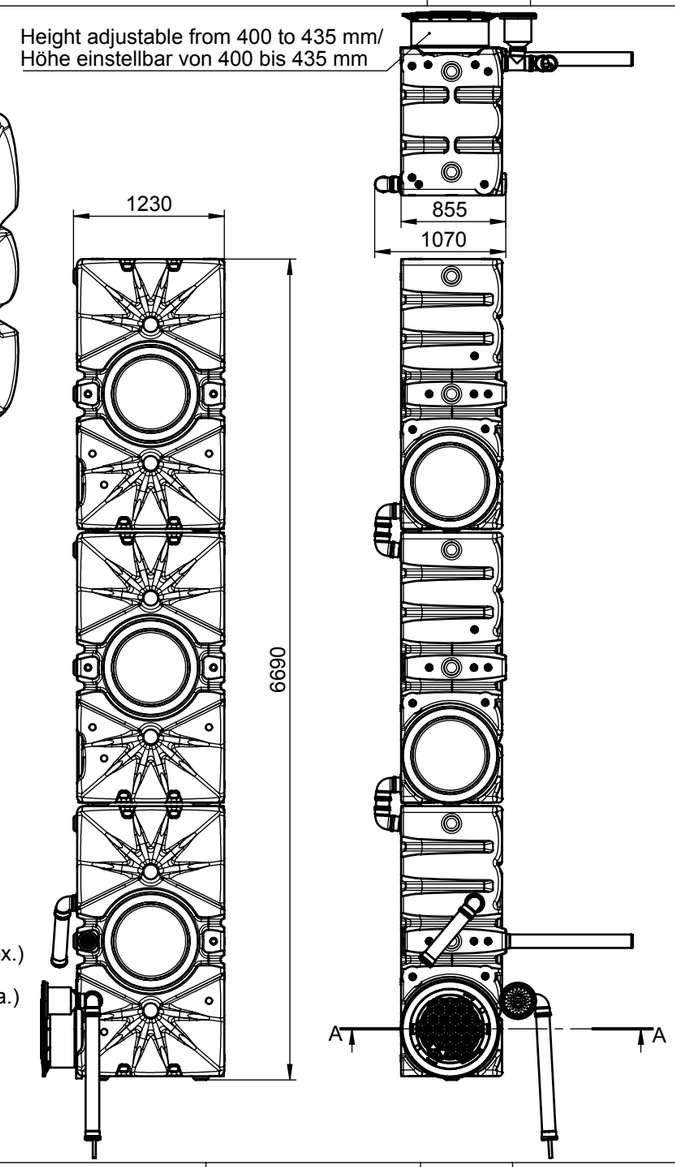

* The represented pipe sections
are not included in scope of supply/
Dargestellte Verrohrung ist
nicht im Lieferumfang enthalten

** Only roof gutter grid (34 pieces / 20 m approx.)
is included in the scope of supply/
Gitterrost für Dachrinne (34 Stücke / 20 m ca.)
im Lieferumfang enthalten

DIN 110 pipe fittings used in installations/
DIN 110 Rohrverschraubungen werden
in den Installationen verwendet.

local article number: 103612

ACO Hochbau
Vertrieb GmbH
24755 Rendsburg, Postfach 320
Tel. +49 4331 354-410
Fax. +49 4331 354-360
www.aco-hochbau.de

technical reference:	drawing-no.:	index:	documenttype:
Bartsch, Martin	**1028135-M**	**001**	marketing drw.
created by: mbartsch	reviewed by: mbartsch	projection:ISO-E	scale: 1:50

title:

serial-released

ACO Rain4me

Complete product garden plus flat tank 6000l standing short side 2 extensions

Komplettprodukt Garten plus Flachtank 6000l stehend kurze Seite 2 Erweiterungen

The reproduction, distribution and utilization of this document as well as the communication of its contents to others without express authorization is prohibited. Offenders will be held liable for the payment of damages. All rights reserved in the event of the grant of a patent, utility model or design. Observe copyright by ISO 16016

release date: 2017-05-10 08:40

sheet: 1/1

Solidworks 2014 - DIN A3 - Version 1.4