Pos.	Item name_Global	Item name_Local	Article No.	1028180/QTY.
1	Flat tank 2000l lying	Flachtank 2000l liegend	103001	1
2	Overflow siphon with rhodent protection	Ueberlaufsiphon mit Tierschutz, gekuerzt	103201	1
3	Inlet flow turbulence reducer	Zulaufberuhiger	103211	1
4	Tank filter	Tankeinbaufilter	103210	1
5	Walkable cover, set high	Begehbare Abdeckung, Set hoch	103101	1
6	Fully automated rainwater management, set	Vollautomatisches Regenwassermanagement, Set	103153	1

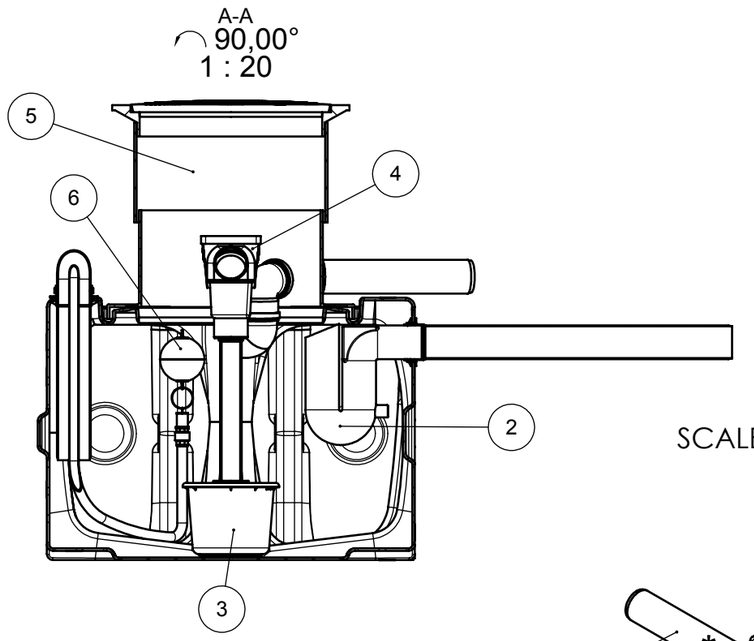

SCALE 1 : 20

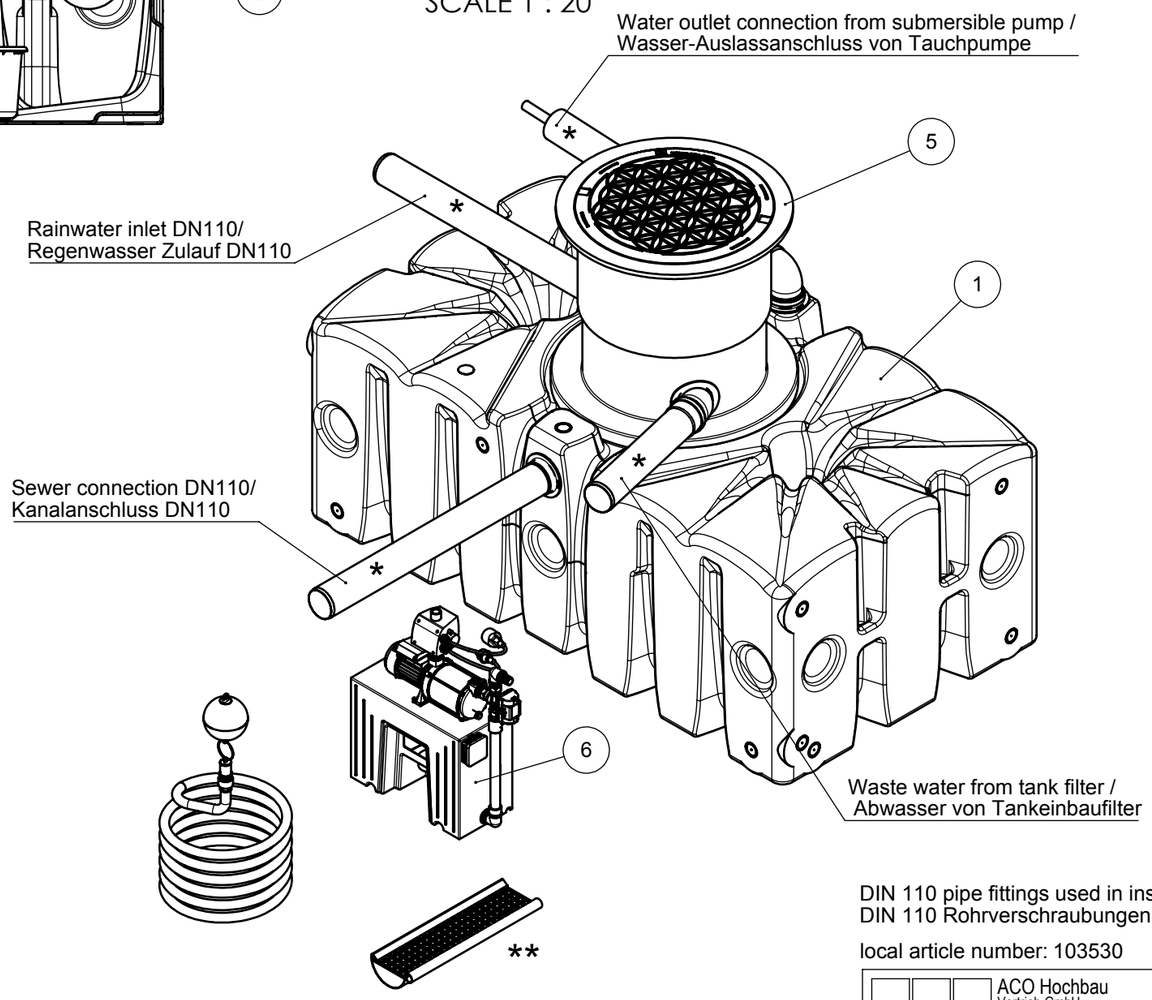

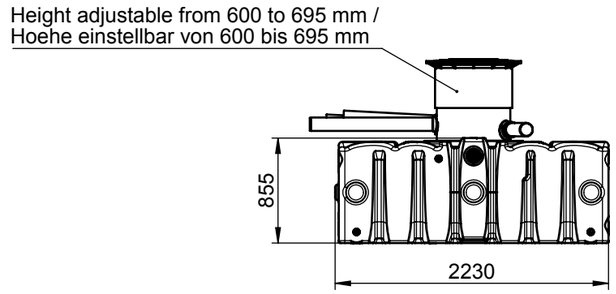

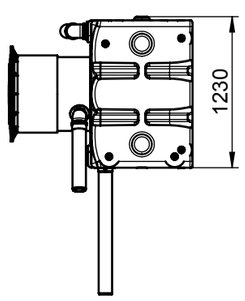

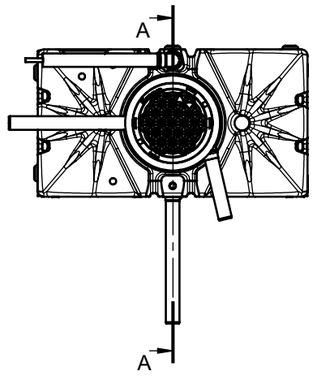

DIN 110 pipe fittings used in installations/
DIN 110 Rohrverschraubungen werden in den Installationen verwendet.

local article number: 103530

* The represented pipe sections are not included in scope of supply/
Dargestellte Verrohrung ist nicht im Lieferumfang enthalten

** Only roof gutter grid (34 pieces / 20 m approx.) is included in the scope of supply/
Gitterrost für Dachrinne (34 Stücke / 20 m ca.) im Lieferumfang enthalten

ACO Hochbau
Vertrieb GmbH
24755 Rendsburg, Postfach 320
Tel. +49 4331 354-410
Fax. +49 4331 354-360
www.aco-hochbau.de

technical reference:	drawing-no.:	index:	documenttype:
Bartsch, Martin	**1028180-M**	**001**	marketing drw.
created by: mbartsch	reviewed by: mbartsch	projection:ISO-E	scale: 1:50

title:

ACO Rain4me

Complete product house and garden professional flat tank 2000l lying

Komplettprodukt Haus und Garten Professional Flachtank 2000l liegend

serial-released

The reproduction, distribution and utilization of this document as well as the communication of its contents to others without express authorization is prohibited. Offenders will be held liable for the payment of damages. All rights reserved in the event of the grant of a patent, utility model or design. Observe copyright by ISO 16016

release date: 2017-05-10 11:43

sheet: 1/1

Solidworks 2014 - DIN A3 - Version 1.4

Pos.	Item name_Global	Item name_Local	Article No.	1028192/QTY.
1	Flat tank 2000l standing	Flachtank 2000l stehend	103000	1
2	Overflow siphon with rhodent protection	Ueberlaufsiphon mit Tierschutz, gekuerzt	103201	1
3	Inlet flow turbulence reducer	Zulaufberuhiger	103211	1
4	Tank filter	Tankeinbaufilter	103210	1
5	Walkable cover, set high	Begehbare Abdeckung, Set hoch	103101	1
6	Fully automated rainwater management, set	Vollautomatisches Regenwassermanagement, Set	103153	1

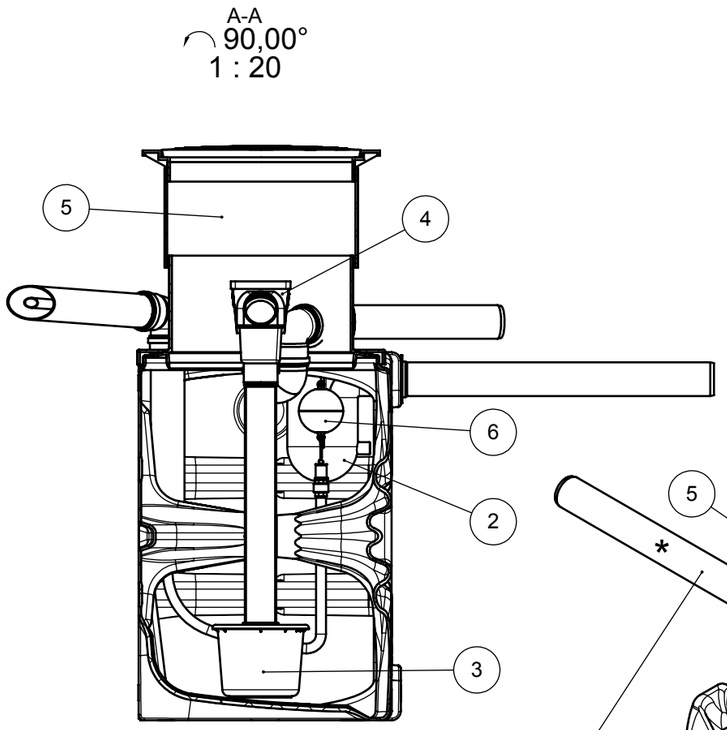

SCALE 1 : 20

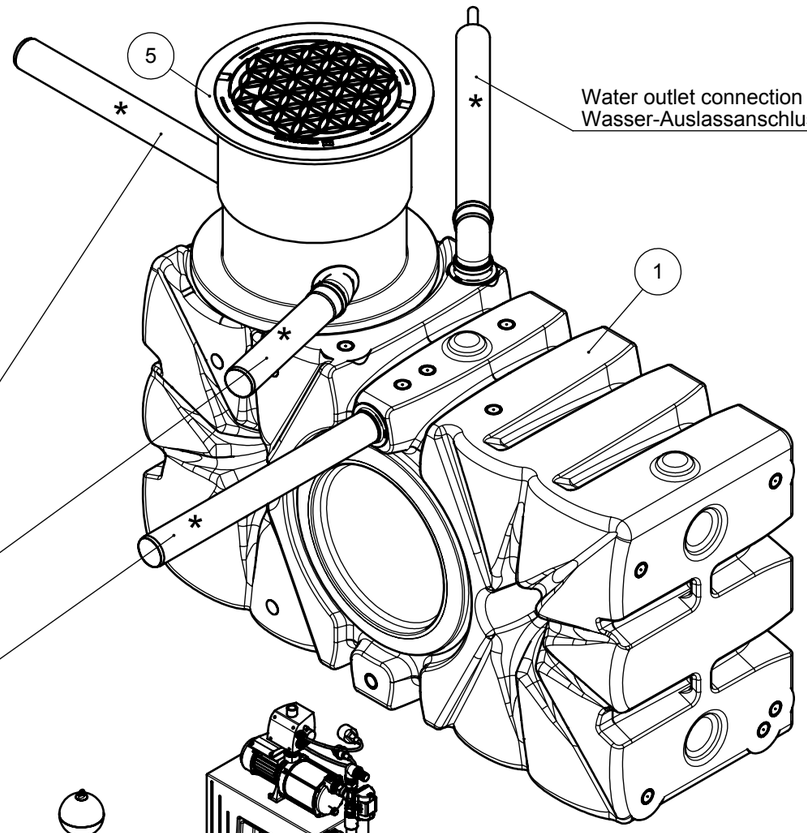

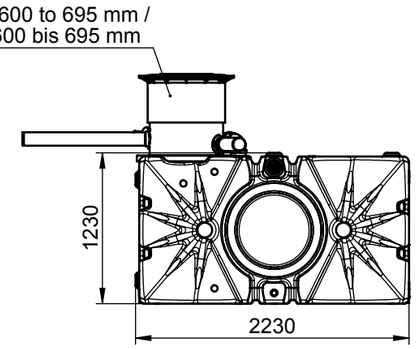

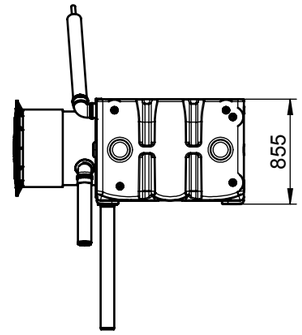

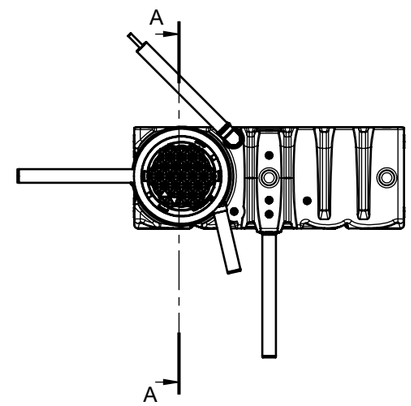

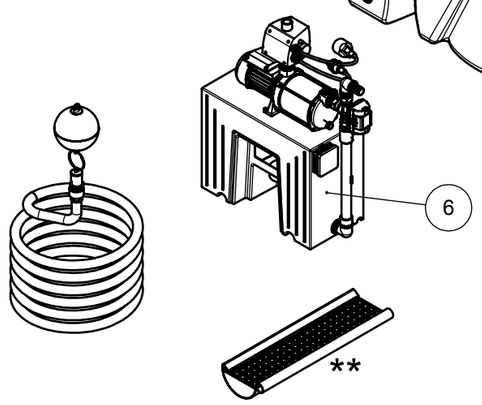

DIN 110 pipe fittings used in installations/
DIN 110 Rohrverschraubungen werden in
den Installationen verwendet.

* The represented pipe sections are not included in scope of supply/
Dargestellte Verrohrung ist nicht im Lieferumfang enthalten

** Only roof gutter grid (34 pieces / 20 m approx.) is included in the scope of supply/
Gitterrost für Dachrinne (34 Stücke / 20 m ca.) im Lieferumfang enthalten

local article number: 103630

ACO Hochbau
Vertrieb GmbH
24755 Rendsburg, Postfach 320
Tel. +49 4331 354-410
Fax. +49 4331 354-360
www.aco-hochbau.de

technical reference:	drawing-no.:	index:	documenttype:
Bartsch, Martin	**1028192-M**	**001**	marketing drw.
created by: mbartsch	reviewed by: mbartsch	projection:ISO-E	scale: 1:50

title:

ACO Rain4me

Complete product house and garden professional flat tank 2000l standing

Komplettprodukt Haus und Garten Professional Flachtank 2000l stehend

serial-released

The reproduction, distribution and utilization of this document as well as the communication of its contents to others without express authorization is prohibited. Offenders will be held liable for the payment of damages. All rights reserved in the event of the grant of a patent, utility model or design. Observe copyright by ISO 16016

release date: 2017-05-10 12:00

sheet: 1/1

Solidworks 2017 - DIN A3 - Version 1.4